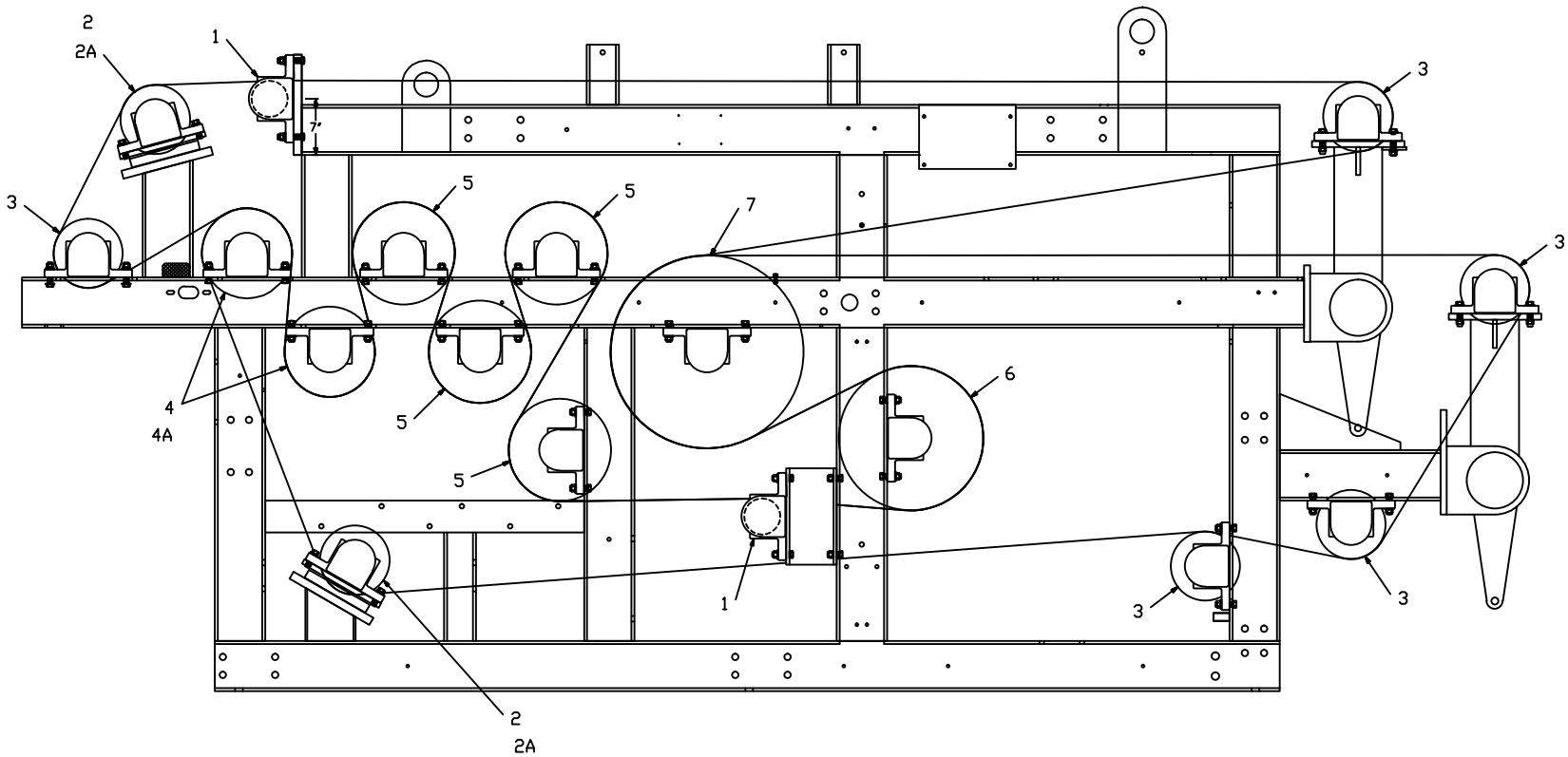

ITEM	QTY.	SIZE	ROLLER DESCRIPTION	BEARING DESCRIPTION	ASSY. DWG.	EXPLODED DWG.
7	1	24"	PERFORATED ROLLER	NON-DRIVE	040510D	SK000391
6	1	18"	INTERMEDIATE ROLLER	NON-DRIVE	040510D	SK000391
5	4	12"	PRESSURE ROLLER	NON-DRIVE	040510D	SK000391
4a	-	-	DRIVE ROLLER	NON-DRIVE	040510D	SK000391
4	2	10"	DRIVE ROLLER	DRIVE - THRU SHAFT	040511D	SK000390
3	5	8"	IDLER ROLLER	NON-DRIVE	040510D	SK000391
2a	-	-	STEERING ROLLER	STEERING - FIXED END	040540	SK000392
2	2	8"	STEERING ROLLER	STEERING - FLOATING END	040541	SK000393
1	2	4"	IDLER ROLLER	NON-DRIVE	040510D	SK000391

TOLERANCE UNLESS NOTED:
ALL DIMENSIONS IN INCHES.
BREAK ALL SHARP EDGES
FRACTIONAL = ± 1/32"
ANGLES = ± 1/2°
DECIMAL .XX = ± .03
.X = ± .1, .XXX = ± .015
MACH. SURFACE 125 MAX.

ASHBROOK
LEADERS IN LIQUID/SOLID SEPARATION

CG	09/98	ROLLER BEARING LOCATIONS KLAMPRESS 85
WOLF	2/90	
NONE		SK000401 0

NEB_ACAD=01/05/94 4:37 PM Rev 12.2 SPARC s.sk000401